MAGNETIC LOCK

Introduction:

The AAC-MGL magnetic lock is designed to be used on external gates or doors that are exposed to the elements. The casing is made of stainless steel and the product is rated to IP67.
Voltage spike suppressors (Varistors) are provided in the hardware kit pack, for 12 VDC used 220k and for 24 VDC used 390k.
The AAC-MGL magnetic lock can be installed on single swing doors or sliding doors and has no residual magnetism.
The electromagnetic lock should always be mounted on the secure side of the door.
The AAC-MGL magnetic lock has a built in REED SWITCH lock monitoring sensor indicates the lock status (open or closed). The REED SWITCH functions are generated through three output wires as following:

Red wire- Normally closed;	**Green wire- Normally open;**	**Black wire- Common.**
Reed Switch not Operated-	No Power on Magnetic Lock.	
	Power on Magnetic Lock and Door Open.	
Reed Switch Operated-	Power on Magnetic Lock and Door Closed.	
REED SWITCH CONTACT RATING:	Maximum Switching Voltage: 24VDC	
	Maximum Switching Current：50mA	
	Maximum Continual Load Current: 50mA	

Wiring and Power input requirements:

12 VDC/ 0.35 A

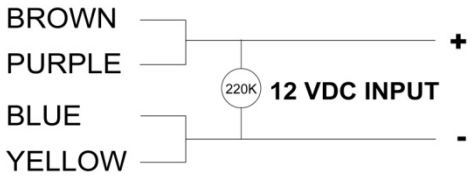

24 VDC/ 0.18 A

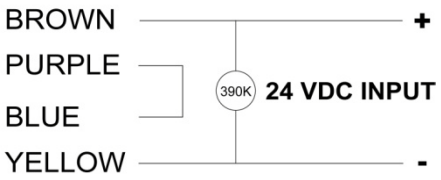

Warning: Wrong connection of wiring will cause the MOV surge suppression of the electromagnetic lock to fail. This is not covered under warranty.

Important Safety Requirements:

The armature plate must remain movable to allow surface alignment with the magnet face. The Magnetic Lock will lose holding force without this floating alignment.

Do not trim the rubber washer mounted on the head of the armature centre bolt.

Trimming rubber washers will adversely affect the release of the armature plate from the magnetic lock.

1. Apply thread-locker glue (i.g. Loctite) to the thread of the Armature-Plate-Fixing Screw (Allen-Screw) to prevent from becoming loose.
2. Locks have to be inspected at regular intervals to ascertain the safety functionality in conjunction with the door environment.
3. The supplied Allen screws cater for maximum door-thickness of 45mm.

Maintenance:

Contacting surface of the electro-magnet and Armature plate must be kept free of contaminating materials. Surfaces should be cleaned periodically with a non-abrasive cleaner. Do not spray the electro-magnet and armature plate surface with any chemicals such as lacquer, etc. This will cause serious problems with the release of the magnetic lock and its armature plate resulting in serious safety problems.

Trouble Shooting:

Problem	Possible Cause	Solution
Door will not lock	No DC voltage to lock.	Check power supply and wiring to magnetic lock.
Reduced holding force	No contact between armature plate and face of magnet.	Ensure mating surfaces are clean and in proper alignment and the armature plate floats freely.
	Low voltage or wrong voltage setting	Correct to specified voltage setting and power input requirement
Reed Switch Status is incorrect	Misalignment of armature plate.	Correct armature plate alignment.

Product Dimensions:

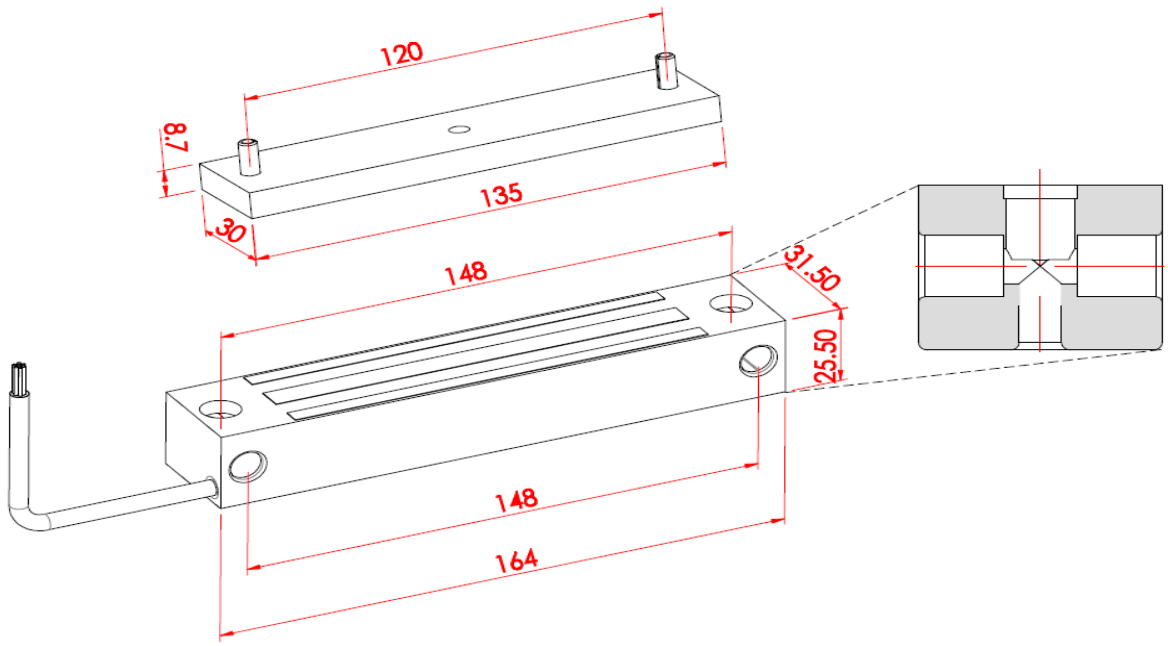

Downee

Customer Service (03) 9364 8288
See downee.com.au for your state office
Tech Support 1800 241 733 techsupport@downee.com.au
downee.com.au